ASSEMBLY INSTRUCTIONS

Playground equipment · Item no. SSE-021

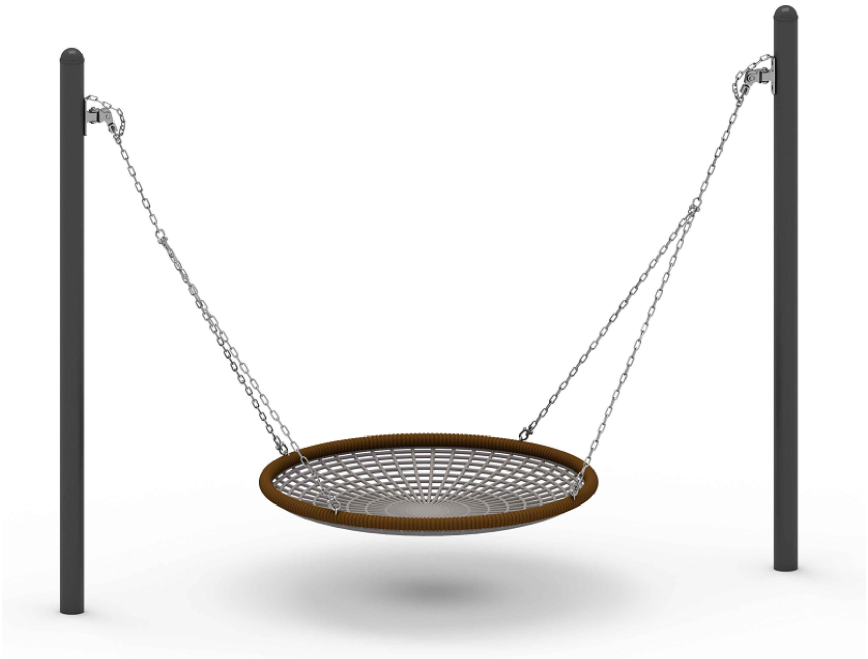

Test standard:	EN 1176-1, EN 1176-2
Footprint:	279 × 201 cm
Minimum space:	382 × 373 cm
Age group:	3 to 14 years · max. 1 child at a time

WISDOM Education Europe GmbH
schönherr.fabrik · Schönherrstraße 8 · 09113 Chemnitz · Germany
Phone: +49 (0) 37360 488 999 · E-mail: hello@wisdomeurope.eu
www.wisdomeurope.eu

Product information

Description:	Playground equipment (Single Swing with Plank Seat)
Item no.:	SSE-021
Imported into the EU by:	WISDOM Education Europe GmbH, schönherr.fabrik, Schönherrstraße 8, 09113 Chemnitz, Germany
Manufacturer:	Wisdom Group
Manufacturer address:	Building 4, Lane 2777, Baoan Road, Malu Town, Jiading District, Shanghai, China
Test standard:	EN 1176-1, EN 1176-2
Footprint:	279 × 201 cm
Minimum space:	382 × 373 cm

Assembly notes

1. Ensure the area is safe and free of hazards prior to assembly. The minimum space required is 382 × 373 cm.
2. A minimum of two adults is required for assembly.
3. The product and materials are intended for indoor or outdoor use under supervision.
4. Before assembly, check the number of parts against the parts list (hardware packages of the individual assembly steps).
5. When assembling, ensure the ground is impact-attenuating or protected by soft material (e.g. cardboard or a blanket) to avoid scratching the equipment.
6. Tighten all bolts firmly after assembly.
7. Remove all assembly materials and tools from the play area before use.
8. Keep children away from the product as long as it is not fully assembled, as well as during disassembly or maintenance work.
9. The product can be installed in two ways: surface mounting on concrete with expansion bolts, or inground installation (set in concrete). Both options are shown in these instructions.

Safety and usage instructions

1. Read the instructions and warning labels carefully before use.
2. Inspect the equipment and play area for potential hazards before each use.
3. Maximum number of simultaneous users: 1.
4. Age group: 3 to 14 years.
5. Never leave children unattended. Constant adult supervision is required.
6. Ensure the surroundings are safe before use. Do not use the equipment in bad weather.
7. Anchoring notes: check monthly that all fixings are tight - the expansion bolts for surface mounting, and the firm seating of the equipment in its foundation for inground installation. Retighten or replace loose connections in good time.
8. The swing may only be used seated. Do not twist the chains or wrap them around the beam.
9. If material is damaged and needs repair, contact the manufacturer or importer for repair or replacement.
10. The ground must be level (horizontal) during assembly and remain level throughout the entire period of use.

Cleaning and maintenance

1. Clean with a damp cloth.
2. Use only neutral cleaning agents.
3. Inspect the product regularly.
4. Carry out inspections according to the inspection schedule at the end of these instructions.
5. Complete the inspection record after each inspection.

Site Layout

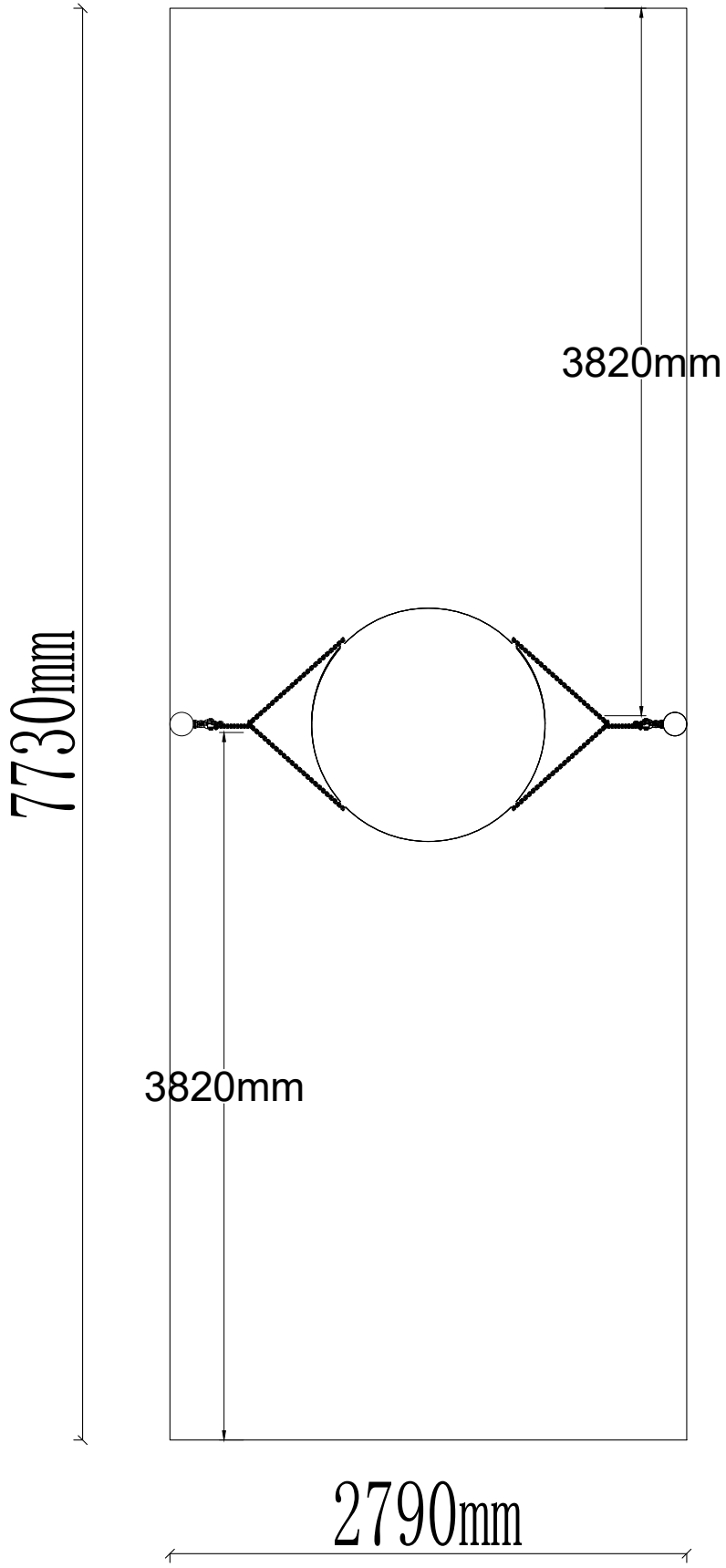

Footing Diagram

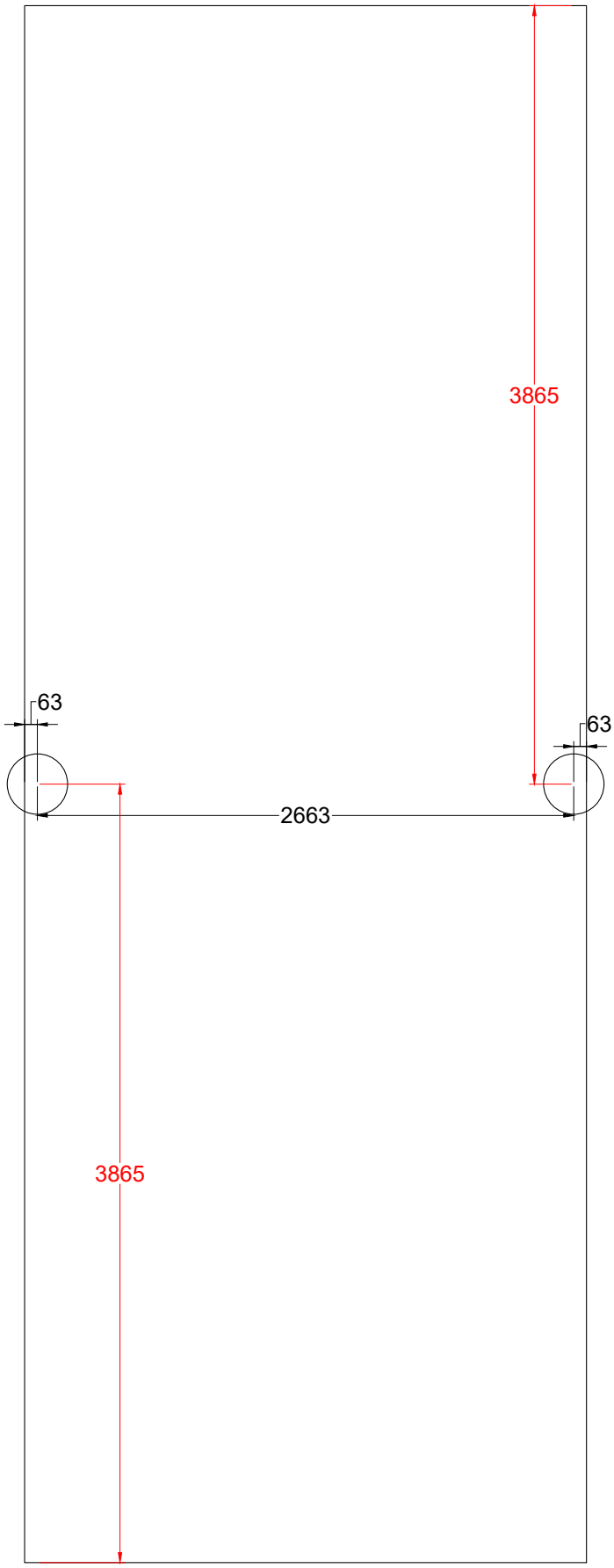

Surface Mounted Installation

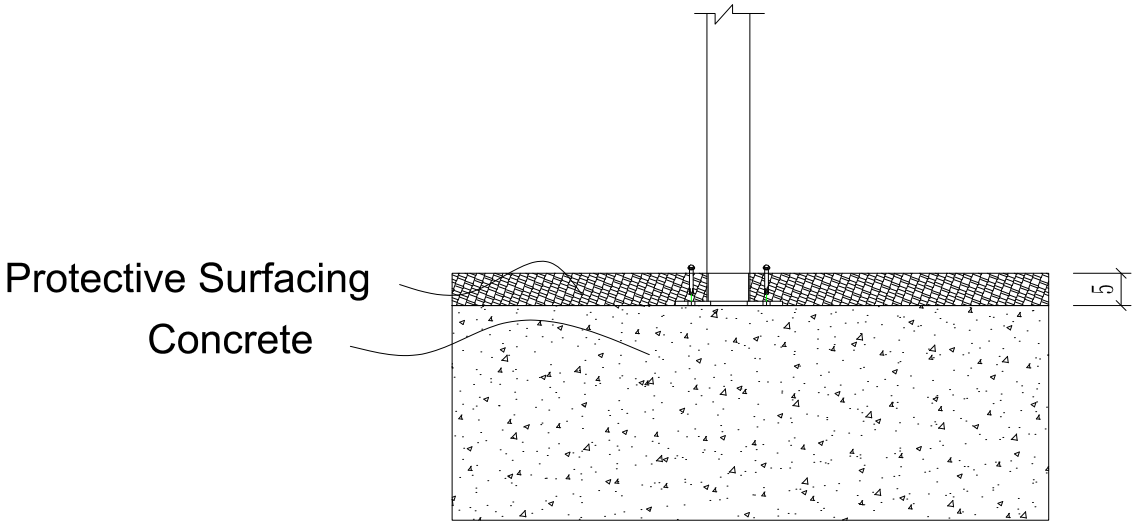

Inground Installation

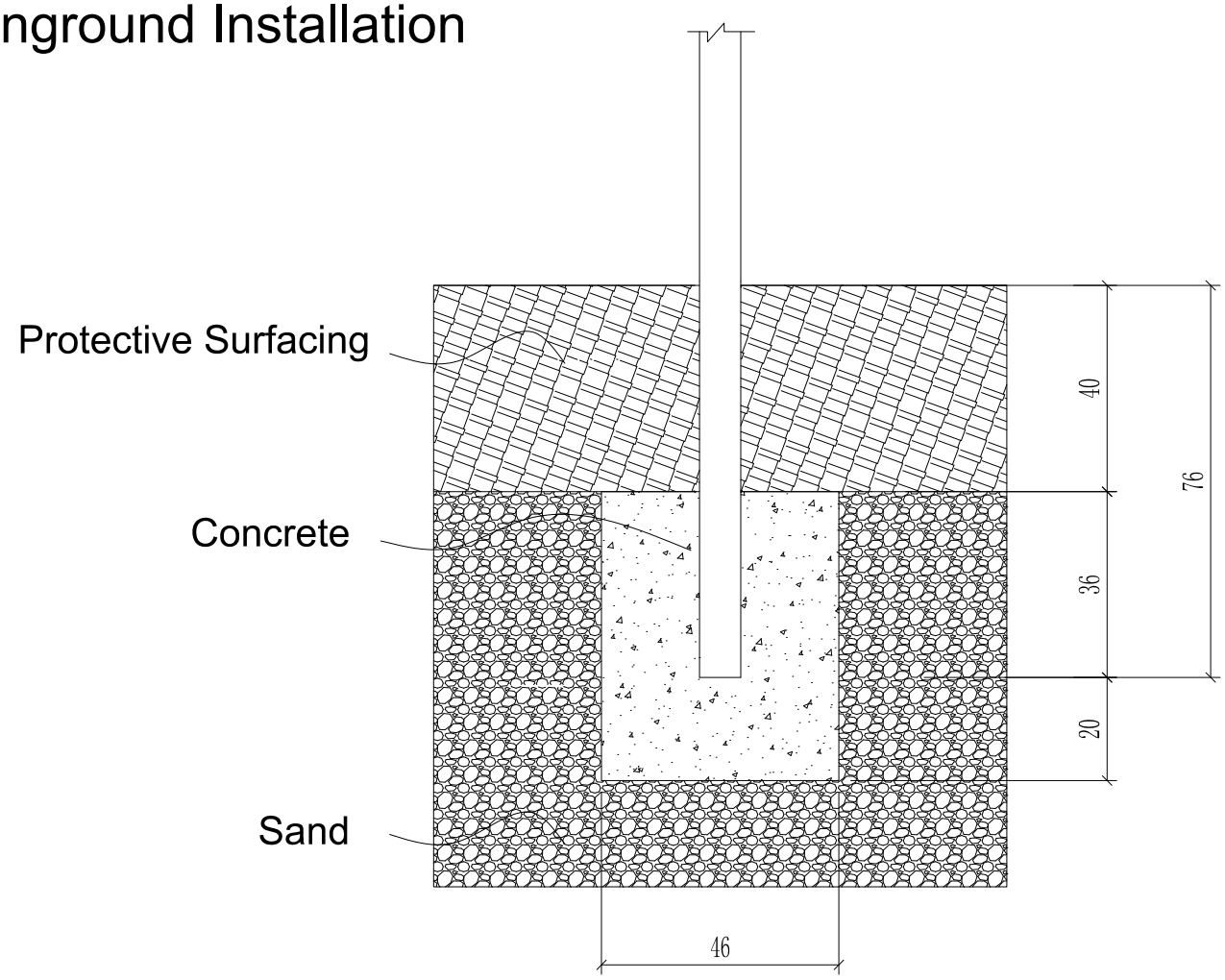

[cm]

Installation steps：

SS-005			
Number	Name	Model	Quantity

1:Use 1 x Single Clevis Connector to connect Swing Clamp with Galvanized Chain, as shown on the overhead drawing.
2:Use 1 x Single Clevis Connector to connect Swing Clamp with Galvanized Chain, as shown on the overhead drawing.

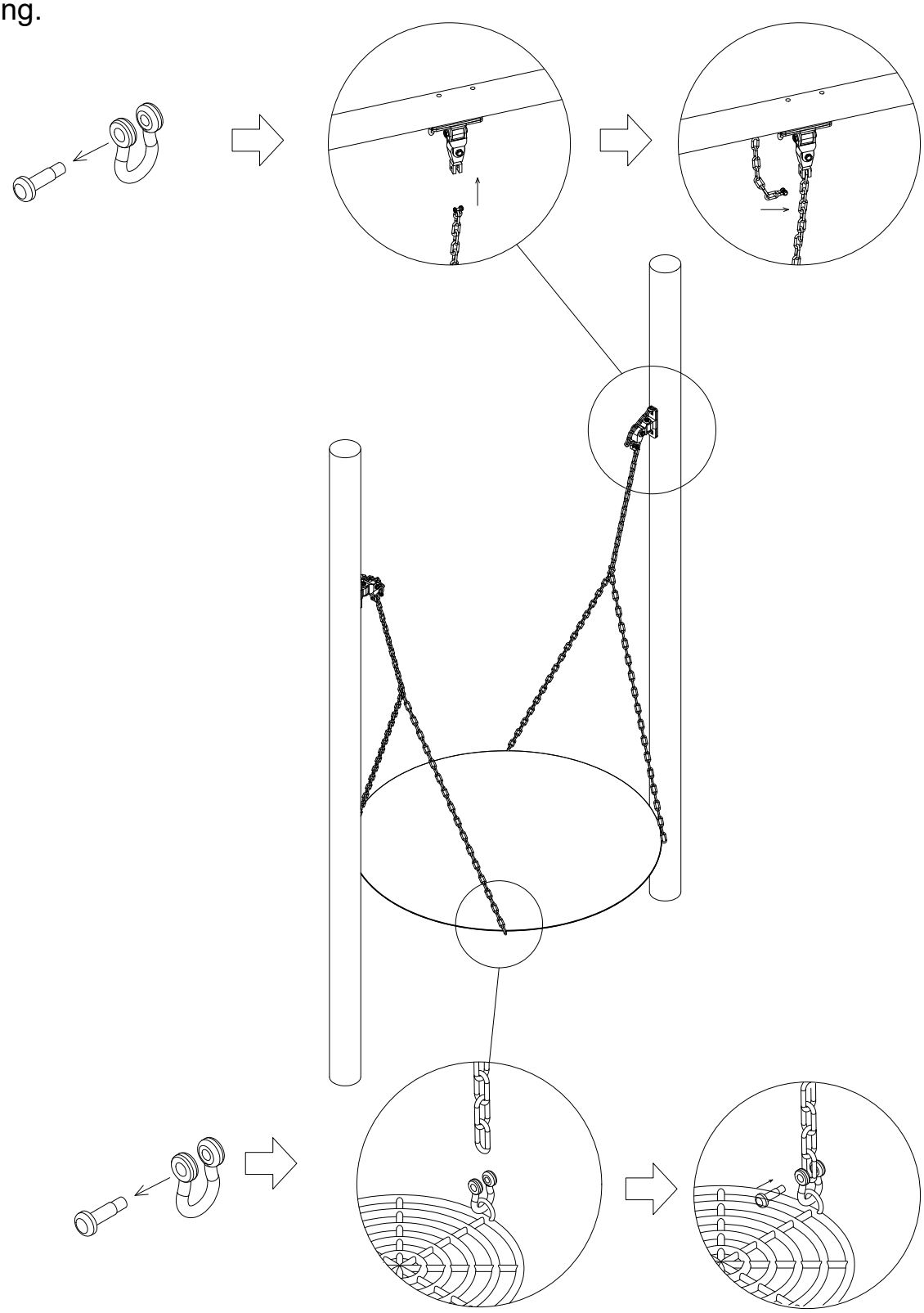

Inspection record

Carry out the inspections at the specified intervals and document the results.

Interval	Check point	YES / NO	Action	Signature
Daily inspection	Screws, bolts and fasteners are firmly tightened.			
	The equipment stands on a level surface; no hazards are present.			
	The equipment is free of dirt and moisture.			
	Moving parts and connections are undamaged and securely fastened.			
	No signs of damage or wear.			
Monthly inspection (in addition to the daily inspection)	Screws are free of rust and damage.			
	All parts are securely connected.			
	Information and compliance labels are intact.			
Annual inspection (in addition to the daily and monthly inspections)	No extensive corrosion; replace affected parts if necessary.			
	No cracks or damage to connecting parts; replace if necessary.			
	No excessive discolouration of components.			
	Screws and connecting elements are in working order, undamaged and not worn.			
	Information labels are legible.			
	The play area under the equipment is safe and level.			

Date of inspection: _____ **Carried out by:** _____

WISDOM PLAYGROUNDS

Thank you for your trust!

If you have any questions about assembly, maintenance or spare parts,
we are happy to help.

WISDOM Education Europe GmbH

schönherr.fabrik · Schönherrstraße 8 · 09113 Chemnitz · Germany

Phone: +49 (0) 37360 488 999 · E-mail: hello@wisdomeurope.eu

www.wisdomeurope.eu